MSATS Procedures: National Metering Identifier

Prepared by:	AEMO Markets
Document ref:	
Version:	7.4
Effective date:	31 May 2026
Status:	FINAL

Approved for distribution and use by:

Approved by:	Michael Gatt
Title:	Executive General Manager - Operations
Date:	30 September 2025

Contents

Current version release details **4**

1. Introduction **5**
1.1. Purpose and scope 5
1.2. Definitions and interpretation 5
1.3. Related AEMO documents 5

2. Allocation and issue of NMIs **7**
2.1. NMI Allocation by AEMO 7
2.2. Issue of NMIs by LNSPs and ENMs for Types 1-6 and Type 9 Metering Installations 7
2.3. Allocation of NMIs for Type 7 Metering Installations 7
2.4. Allocation of NMIs for non-contestable unmetered loads 9

3. NMI Structure **9**

4. NMI Registers **10**

5. NMI Checksum **10**

6. Datastream suffix **11**
6.1. General 11
6.2. Energy Direction Flows 11

7. Datastream suffix for interval metering **13**
7.1. Datastream Suffix for Accumulated Metering Data 14
7.2. Wholesale and Bulk Supply Connection Points 14

8. Connection points with check metering **15**

9. NMI Rules **15**
9.1. NMI Allocation and Verification 15
9.2. NMI Extinction 16

10. TNI Conventions – Grid Connected NMIs **17**

11. TNI Conventions – SAPS NMIs **17**

12. Migration of Grid Connected NMIs to SAPS **18**

13. Migration of SAPS Connected NMIs to Grid **18**

Appendix A. Examples of NMI application – interval metering data **20**
A.1 One End User metered on the secondary side of transformer 20
A.2 One End User, multiple metered on the secondary side of transformer 21
A.3 One End User, previously two tariff metering, e.g. general supply & off- peak on secondary side of transformer 21
A.4 One End User, two controlled loads, one twin element meter 22
A.5 One End User, two twin element meters 22

A.6 One End User, multiple meters on secondary side of multiple transformers in the same substation building an LV switchboard in common switchroom 23
A.7 Three End Users, metered on secondary side of multiple transformers in the same substation building 24
A.8 One End User, two separate HV supplies to two separate substations, both metered on secondary side of the transformers 25
A.9 One End User, two separate substations adjacent to each other or one single substation with two separate transformers in a single substation, with a "normally open" point separating the HV supplies into two sources 26
A.10 One End User, two separate substations adjacent to each other or one single substation with two separate transformers, with the HV supply originating from a single source 27
A.11 One End User, two separate substations not adjacent to each other but on same premises 28
A.12 Multiple End Users, High rise building 29
A.13 One End User with multiple supply points 30
A.14 One End User with Standby Supply 31
A.15 One End User or Participant, Wholesale Metering at Transmission Node 32
A.16 One End User or Participant, Wholesale Metering at Transmission Node 33
A.17 One End User, Wholesale Metering at Transmission Node 34
A.18 Street Lighting (Type 7 Metering Installation) 35
A.19 CMS Type 9 Metering Installation 36
A.20 Non Contestable Unmetered Load –NMI With Single Device and NMI with Multiple Devices 37
A.21 Non Contestable Unmetered Load –NMI with Single Device 38

Appendix B. Examples of NMI application – accumulated energy data 39
B.1 Single Meter with Single Datastream 39
B.2 Two Meters each with Single Datastream 39
B.3 Two Meter Installation, One Meter Recording Consumption for a Controlled Load 40
B.4 Three Datastream, One Meter with Single Measurement Element 40
B.5 Multi-function Meter 41
B.6 Two Multi-function Meters 41

Appendix C. Sample Java code for NMI Checksum 42

Appendix D. Example of NMI Checksum calculation 45

Appendix E. Examples of NMI Classification Code application 48

Version release history 55

Tables

Table 1 Datastream Suffixes for Interval Metering Data 13
Table 2 Datastream Suffixes for Accumulated Metering Data 14
Table 3 Example NMI Results 46
Table 4 NMIs and NMI Checksums 46
Table 5 Examples of NMI Classification Code application 48

Current version release details

Version	Effective date	Summary of changes
7.4	31 May 2026	Updated to implement the National Electricity Amendment (Unlocking CER benefits through flexible trading) Rule 2024 No. 15 – type 9 metering

Note: There is a full version history at the end of this document.

1. Introduction

1.1. Purpose and scope

This National Metering Identifier Procedure (Procedure) is an MSATS Procedure. It sets out the structure for *NMIs* to be used in the *NEM,* details Datastreams for each category of *metering installation* and addresses the matters contemplated in clauses 7.8.2(d)(2), and 7.8.2(ea) (eb) & (ec) of the NER.

The successful operation of the *NEM* relies on:

- positive identification of *connection points*;
- a verifiable linkage between connection points, NMI Standing Data and metering data; and
- an audit trail for *metering data* collection and processing.

The *NMI* is a unique identifier for each *connection point*, an index against which other essential data can be managed. It is crucial to the accurate management of End User registration and transfer, c*onnection point* change control and data aggregation and transfer.

1.2. Definitions and interpretation

1.2.1. Glossary

Terms defined in the *National Electricity Law* and the NER have the same meanings in these Procedures unless otherwise specified in this clause.

Terms defined in the NER are intended to be identified in these Procedures by italicising them, but failure to italicise a defined term does not affect its meaning.

The Retail Electricity Market Procedures – Glossary and Framework:

(a) Is incorporated into and forms part of this Procedure; and

(b) Should be read in conjunction with this Procedure.

1.2.2. Interpretation

This Procedure is subject to the principles of interpretation set out in Schedule 2 of the National Electricity Law

1.3. Related AEMO documents

Title	Location
Retail Electricity Market Procedures – Glossary and Framework	http://www.aemo.com.au/Electricity/National-Electricity-Market-NEM/Retail-and-metering
MSATS Procedures **Principles and Obligations for all Connection Points**	http://www.aemo.com.au/Electricity/National-Electricity-Market-NEM/Retail-and-metering/Market-Settlement-and-Transfer- Solutions

Title	Location
Metrology Procedure Part A	http://www.aemo.com.au/Electricity/National- Electricity-Market-NEM/Retail-and- metering/Metrology-Procedures-and-Unmetered- Loads
NMI Allocation List	http://www.aemo.com.au/Electricity/National- Electricity-Market-NEM/Retail-and- metering/Metering-procedures-guidelines-and-processes

2. Allocation and issue of NMIs

2.1. NMI Allocation by AEMO

a) *NMIs* are allocated by AEMO for issue by LNSPs (for *connection points*) or ENMs (for *child connection points*) in accordance with this Procedure.

b) Blocks of available *NMIs* are allocated to LNSPs by AEMO in accordance with the NMI Allocation List.

c) Blocks of available *NMIs* are allocated and reserved for ENMs by AEMO.

d) An ENM must apply to AEMO for a *NMI* prior to assuming responsibility for a *child connection point.* AEMO will issue a *NMI* to the ENM for that *child connection point*.

e) AEMO may allocate blocks of *NMIs* to LNSPs and ENMs from any unused range.

f) The range 5 XXX XXX XXX has been reserved for use in the gas industry.

g) The range 9 XXX XXX XXX has been reserved as a "break-out" if it becomes necessary to move to an 11 character *NMI*.

2.2. Issue of NMIs by LNSPs and ENMs for Types 1-6 and Type 9 Metering Installations

a) For each new *connection point* the FRMP must apply to the relevant LNSP for a *NMI* prior to assuming responsibility for the *connection point,* and the LNSP must issue a *NMI* to the FRMP for that c*onnection point* from the LNSP's allocated list.

b) For each new *child connection point* the FRMP must apply to the relevant ENM for a *NMI* prior to assuming responsibility for the *child connection point,* and the ENM must issue a *NMI* to the FRMP for that *child connection point* as provided by AEMO.

c) The LNSP or ENM (as applicable) must register the *NMI* for the *connection point* or *child connection point* (as applicable) in MSATS in accordance with the MSATS Procedures Principles and Obligations for all Connection Points.

d) For *distribution network connection points* the LNSP must populate the LR field.

e) For *child connection points* the ENM must populate the LR field with the Parent FRMP Participant ID..

2.3. Allocation of NMIs for Type 7 Metering Installations

Schedule 7.4 of the NER and the Metrology Procedure: Part B establish the framework for type 7 *metering installations*.

2.3.1. Common Requirements across the NEM

a) Each type 7 *metering installation* applies to a unique combination of FRMP, End User, TNI, DLF, and LNSP.

b) The *NMI* may contain different agreed Unmetered Device *loads*. One *NMI* is required for each type 7 *metering installation*. Individual Unmetered Device *loads* may be added to and removed from the *NMI* without the need to change the *NMI*.

c) For each TNI there will be one or more *NMIs* representing municipal lighting *loads*, and several other *NMIs* representing the various utilities who have Unmetered Device *loads* in the geographic area serviced by the TNI.

d) New *NMIs* must only be created where one or more Unmetered Device *loads* with a unique and previously unregistered set of attributes (FRMP, End User, TNI, DLF, LNSP) are to be put into service.

e) A *NMI* may be abolished if the Unmetered Device *load* is removed (e.g. street turned into park, and lighting removed) or the Unmetered Device *load* is transferred to another *NMI*. (E.g. due to network re-arrangements).

f) A change of one attribute (FRMP, TNI, DLF, LNSP), or a change of End User, will not of its own require an abolition of the *NMI*.

g) The NER and Metrology Procedure: Part B provide for the allocation of *NMIs* to broad classes of Unmetered Device *connection points* provided that certain attributes required for *settlements* remain unique.

   AEMO expects that each LNSP has a procedure for the allocation of *NMIs* for Unmetered Device supplies, which has been agreed by the FRMP and will be available for review by the Jurisdiction or AEMO on request.

h) A procedure for the allocation of *NMIs* for street and public lighting across a geographic area must include the following steps:

   (i) Define the geographic area supplied from a *transmission* node.

   (ii) Subdivide the Unmetered Device supplies within this geographic area according to End Users. If necessary, sub-divide these Unmetered Device supplies to take account of variations of DLF that apply across the area.

   (iii) If necessary, subdivide these Unmetered Device supplies according to FRMP.

i) When considering materiality, the LNSP may allocate streetlights by geographic area, or postcode, or by some other available grouping where the majority of that Unmetered Device *load* is supplied from a single *transmission* node.

j) Where *distribution* feeders are commonly supplied from one *transmission* node, but are regularly moved to another *transmission* node for maintenance or seasonal reasons, the Unmetered Device *NMI* can be recorded in MSATS against the *transmission* node through which the majority of the *energy* is delivered. This approach is supported by the fact that the calculation of *marginal loss factors* takes account of seasonal flows at *transmission* nodes, and that the *marginal loss factors* for adjacent TNIs where *load* sharing is possible are unlikely to be significantly different.

2.4. Allocation of NMIs for non-contestable unmetered loads

a) Each *non-contestable unmetered load* applies to a unique combination of FRMP, End User, TNI,DLF, and LNSP.

b) The *NMI* may be related to a single device or may contain different agreed Unmetered Device *loads* with the same Unmetered Device type. One *NMI* is required for each *non-contestable unmetered load*. Individual Unmetered Device *loads* may be added to and removed from the *NMI*without the need to change the *NMI.*

c) A *NMI* may be abolished if the *non-contestable unmetered load* is removed or transferred to another *NMI*.

d) A change of one attribute (FRMP, TNI, DLF, LNSP), or a change of End User, will not of its own require an abolition of the *NMI*.

e) The NER and Metrology Procedure: Part B provide for the allocation of *NMIs* to broad classes of *non-contestable unmetered loads* provided that certain attributes required for *settlements* remainunique.

   AEMO expects that each LNSP has a procedure for the allocation of *NMIs* for *non-contestableunmetered loads*, which has been agreed by the FRMP and will be available for review by the Jurisdiction or AEMO on request.

f) Where *distribution* feeders are commonly supplied from one *transmission* node, but are regularly moved to another *transmission* node for maintenance or seasonal reasons, the *non-contestable unmetered load NMI* can be recorded in MSATS against the *transmission* node through which the majority of the *energy* is delivered.

3. NMI Structure

a) Generally, the *NMI* is an all numeric, ten (10) character identifier. The key attributes of a *NMI* are:

   (i) The *NMI* must embody only numeric characters, except as explicitly provided in thisProcedure, and must not contain spaces.

   (ii) Where alphanumeric characters are allowed, the letters “O” and “I” are not permitted in order to avoid confusion with the numbers 0 and 1.

   (iii) “W” is reserved as the fifth character of the allocated identifier for wholesale *transmissionconnection metering points* and Bulk Supply Points only. It may only be used if the *NMI* is allocated from an alphanumeric block.

   (iv) Embedded characters or meanings must not be used in allocating *NMIs*.

b) The *NMI* may be used in conjunction with other identifiers or suffixes. These include:

   (i) The NMI Checksum, a single numeral used to assist with data validation when the *NMI* ismanually entered into a computer system.

   (ii) The NMI Datastream suffix used to identify a particular Datastream associated with a *connection point*.

c) The base *NMI* is ten characters. In some circumstances the NMI Checksum is appended to the *NMI*to form an eleven-character *NMI*, or the two-character NMI Datastream suffix may be appended to form a twelve-character *NMI*. The NMI Checksum is not used with the Datastream suffix because the Datastream suffix is intended for use only with electronic data transfer.

d) All *NMIs* issued for *connection points* which become contestable after 1 January 2001 are requiredto be all numeric.

e) The all-numeric requirement applies to the basic ten character *NMI*, and not to other suffixes usedwith the identifier.

f) *Connection points* that were contestable prior to 1 January 2001 were allocated with an alphanumeric *NMI.*

g) TNSPs may continue to allocate alphanumeric *NMIs* from *NMI* blocks supplied to them prior to 1January 2001. Wholesale and bulk supply *connection points* (LR = POOL*) will continue to have alphanumeric *NMIs* issued.

4. NMI Registers

LNSPs and ENMs must maintain a register of *NMIs* assigned by them to *connection points* or *child connection points*.

5. NMI Checksum

a) To reduce the occurrence of incorrect transfers attributable to NMI data entry errors, a one digit NMI Checksum has been implemented.

b) Sample java code for an implementation of the NMI Checksum is provided in Appendix A. A general form of the algorithm used to create the NMI Checksum is:

   (i) Double the ASCII value of alternate digits beginning with the right-most digit.

   (ii) Add the individual digits comprising the products obtained in sub-paragraph (i) to each ofthe unaffected ASCII value digits in the original number.

   (iii) Find the next highest multiple of 10.

   (iv) The check digit is the value obtained in sub-paragraph (ii) subtracted from the value obtained in sub-paragraph (iii). If the result of this subtraction is 10, the check digit is 0.

c) Appendix D provides a worked example of the algorithm and a list of thirty *NMIs* with NMI Checksums calculated by the algorithm.

d) The NMI Checksum is always a numeric character.

e) The NMI Checksum is not mandatory when transferring NMI identified data electronically betweenParticipants. It is focussed on applications where data entry occurs and there is a risk of character transposition, for example, from paper to electronic systems or through an interactive telephone service.

f) When publishing a *NMI* for End Users, the *NMI* will appear in its 11-character format, and the NMIChecksum will be the final character of the *NMI*.

6. Datastream suffix

6.1. General

a) *Settlements* relies on the collection and delivery of large volumes of *metering data*. For any particular *connection point* there could be multiple *energy* measurement elements and data recorders with multiple channels. Accurate identification of Datastreams is essential. The Datastream suffix provides identification at the measurement element level for all Datastreams from the *connection point* identified by the *NMI*.

b) The Datastream suffix is a two-character identifier used in conjunction with a *NMI* to identify a particular Datastream. It allows differentiation of measurement quantities at a *metering point*, and differentiation of quantities between different measurement elements or registers at a *connection point*.

c) A twelve-character *NMI* identifies the *connection point* (first ten characters) and associated Datastream (Datastream suffix as the last two characters).

d) The Datastream suffix has retained alphanumeric characters, even when both characters are numerals, because an all numeric structure could not accommodate the variety of data types or number of *meters* that could be required for a *connection point*.

e) The Datastream suffix is not used in conjunction with the NMI Checksum. The Datastream suffix enables identification of data at a sub-*connection point* level and to identify the individual sources of *metering data* to maintain necessary audit trails.

6.2. Energy Direction Flows

The following conventions are used in the *NEM*:

a) All flows are specified by reference to their direction to or from the *market*. Hence:

   (i) All *energy* from the *market* is considered export (i.e. *energy* consumed by an End User is export) (Export).

   (ii) All *energy* into the *market* is considered import (i.e. the *energy generated* into the *market* is import) (Import).

b) AEMO shall define the import and export *energy* flows for *interconnectors* on a case-by-case basis.

c) For the purposes of MSATS, 'Net' *energy* is derived as: Net = Export – Import (E – B)

   (i) Hence, the net *energy* for *generation* is negative (in a net quantity) and an End User's *energy* is positive (in a net quantity).

   (ii) For Accumulation Meter Datastreams, this means that the *energy* values for import (*generation*) must be negative in the MDM Data File.

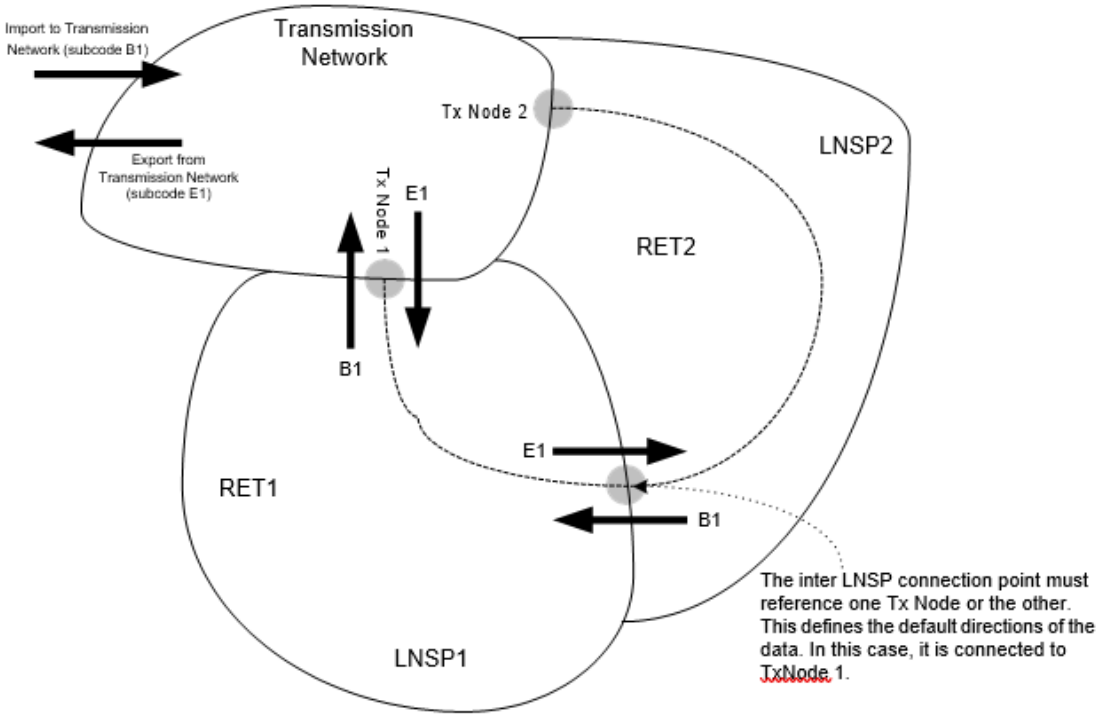

The same convention is used for kvarh, i.e.:

kvarh supplied to an End User are export kvarh;

and kvarh received from an End User are import kvarh.

7. Datastream suffix for interval metering

a) *Interval metering data* may be sourced from *metering installations* type 1 to 5, 7 or 9 and *non- contestable unmetered loads*. *Metering data* from a type 6 *metering installation* that has been transformed through a profiling algorithm into TIs is also identified as *interval metering data*.

b) *Interval metering data* is identified in the Datastream suffix by a first character that is alpha [A to H,J to N, P to Z].

c) Identifiers in the 'Master' column in Table 1 are those normally used in the *NEM*. Where a *check meter* is required (type 1 & 2 *metering installations*), identifiers from the 'Check' column are used for the *check meter*. Where the data from the 'Master' and 'Check' *metering installations* has beenaveraged in accordance with the NER, the 'Ave' column identifiers are used. Where only the difference between import and export is required, the 'Net' column identifiers are used.

Table 1 Datastream Suffixes for Interval Metering Data

	First character				Second character
	Ave	**Master**	**Check**	**Net**[1]	
IMPORT kWh	A	B	C	N	Meter numbers or measuring elements are to be 1-9 then A-H, J-N, P-Z
EXPORT kWh	D	E	F		
IMPORT kvarh	J	K	L	X	
EXPORT kvarh	P	Q	R		
KVAh	S	T	U		
Power Factor pF		G			
Q Metering Qh		H	Y		
Par Metering parh		M	W		
VOLTS (or V2h) or Amps (A2h)		V	Z		

d) Where a *meter* has multiple measurement elements, the convention for the population of the second character of the Datastream Suffix is:

(i) Increment the second character by one if the first character is the same. For example, use E1 and E2 if both elements are export kWh, and B1 and B2 if they are both import kWh.

(ii) Use the same second character if the first character is different. For example, use E1 and B1 if they are export kWh and import kWh respectively.

Examples:

2727000011 E2 relates to Export kWh data from either meter no.2 (single element) or element 2 of meter no.1 (twin element) pertaining to the *connection point* with the *NMI* of 2727000011. Refer 11.4 and 11.5 for diagrammatic examples.

[1] Use where AEMO accept 'Net' DataStream Suffix(s)

TTTTW00015 B1 relates to Import kWh *interval metering data* from meter no.1 pertaining to a wholesale *connection point* with the *NMI* of TTTTW00015.

7.1. Datastream Suffix for Accumulated Metering Data

a) If the first character of the Datastream suffix is numeric [1 to 9] the attached data is *accumulatedmetering data* from a type 6 *metering installation*.

b) The Datastreams identified by characters 1 to 6 are active energy (kWh). Datastreams identifiedwith 7, 8, or 9 are as defined by the LNSP or the ENM (as applicable).

Table 2 Datastream Suffixes for Accumulated Metering Data

First Character		Second Character
1	First Datastream	Meter numbers are to be 1-9 then A-H, J-N, P-Z.
2	Second Datastream	
3	Third Datastream	
4	First controlled load Datastream	
5	Second controlled load Datastream	
6	Third controlled load Datastream	
7	First LNSP/ENM defined Datastream	
8	Second LNSP/ENM defined Datastream	
9	Third LNSP/ENM defined Datastream	

Examples:

8877886644 1A relates to consumption energy data from meter A (the 10th meter at the *metering installation*), register 1 applicable to a *connection point* with the *NMI* of 8877886644.

8866448877 43 relates to consumption energy data from a controlled circuit register in the 3rd meter at the installation, the data pertaining to a *connection point* with the *NMI* of 8866448877.

7.2. Wholesale and Bulk Supply Connection Points

a) A wholesale or bulk supply *connection point* is a *transmission network connection point* as requiredby Appendix E.

b) For a wholesale or bulk supply *connection point* a *NMI* must be assigned to each individual physical or logical metering point that contributes to the wholesale or bulk supply *connection point*. This requirement is to facilitate a drill down to Datastreams where AEMO is obliged to auditor otherwise investigate *energy* flows for a wholesale or bulk supply *connection point*.

c) AEMO assigns the NMIs for regulated interconnectors.

d) When the *metering point* doesn't align with the physical *connection point*, the *NMI* for the *connection point* is used to identify a logical *metering point*. Each *metering point* that contributes tothe logical *metering point* must be assigned a separate *NMI*. The TNSP is responsible for determining the algorithm used to relate the logical *metering point* for a physical connection to the *metering point(s)* that contribute data for the physical connection.

e) Any Participant intending to apply a logical *meter* to a *connection point* must contact AEMO's Registration Desk to seek approval prior to entering any data into MSATS.

8. Connection points with check metering

a) For *connection points* with a type 1 *metering installation*, the *NMI* must be assigned to every averaged *energy* flow pertaining to each *connection point*.

b) A type 1 metering installation requires a duplication of metering, voltage and current sources in accordance with the NER. The Datastreams from one metering installation are designated 'Master' and from the other metering installation are designated 'Check'.[2]

c) When both Datastreams are from measurement systems of identical accuracy standards, the NERrequire that the *energy* Datastream submitted for *settlements* be the average of the values from the master *meter* and *check meters*. In this case the Datastream suffixes will have an initial character A (import) or D (export) or N (net).

d) If the *check meter* is of a lower accuracy standard than the metering installation, only the 'Master'1 Datastream is submitted, in which case the Datastream suffixes will have an initial character B (import) or E (export) or N (net).

e) The NER requires that a type 2 *metering installation* has partial *check metering*. The obligations forpartial *check metering* can be met by a *check meter*, in which case the Datastreams will be identified as for a type 1 *metering installation*.

f) Alternatively, the arrangement of a partial *check metering* may be as agreed between AEMO andthe MC. In a partial *check metering* scheme each Datastream used needs to be separately identified. It is possible that a number of *NMIs* will be used in a partial *check metering* scheme toidentify logical metering points, and a particular meter and instrument transformer combination may be a component of more than one partial *check meter*. The actual arrangements will be partof the scheme submitted by the MC to AEMO for approval.

9. NMI Rules

9.1. NMI Allocation and Verification

a) All *NMIs* must be allocated to End User *connection points* by LNSPs or ENMs (as applicable) and:

   (i) The LNSP must verify that the *NMI* is correctly associated with the TNI in MSATS.

   (ii) The ENM must verify that the *NMI* is correctly associated with the correct *embeddednetwork* and Parent NMI, and have the same TNI Code as the Parent NMI in MSATS.

b) When an *Embedded Generator* registers as a *Market Generator* and AEMO determines that a *virtual transmission node* is required for the *Embedded Generator*, AEMO will provide an

[2] Refer to Table 1

appropriate TNI to the LNSP and the LNSP must assign this TNI to the *Embedded Generator connection point*.

c) When a *Generator* with one or more *generating units* within an *embedded network* registers as a *Market Generator* in respect of those *generating units* and AEMO determines that a *virtual transmission node* is required for those *generating units*, AEMO will provide the appropriate TNI tothe ENM and the ENM must assign this TNI to the *Generator* Child NMIs.

9.2. NMI Extinction

a) A *NMI* must be recorded as extinct in the *metering register* only when:

(i) a connection point is abolished;

(ii) the *connection point* changes from the LV to the HV side of the service *transformer*;

(iii) a *child connection point* becomes directly connected to the LNSP's *network;*

(iv) a connection point directly connected to the LNSP's network becomes an off-market embedded network connection;

(v) a connection point directly connected to the LNSP's network becomes a child connection point;

(vi) the physical location of a *connection point* changes;

b) A *NMI* transitioning to a type 9 *metering installation* may be recorded as extinct in the *metering register* when:

(i) all Unmetered Devices for a type 7 *metering installation* have been transferred to a type 9 *metering installation*; or

(ii) all Unmetered Device(s) for a NCONUML *metering installation* have been transferred to a type 9 *metering installation*.

c) The only circumstance where a *NMI* may be re-used is when a *NMI* allocated to a builder's temporary *supply* is used for the permanent *supply* once construction is completed, provided:

(iii) the final *supply* arrangements have the same effective *connection* arrangement to the local *network*; and

(iv) the temporary *supply* is abolished when the permanent *supply connection* is energised.

d) Subject to section 9.2(a) and (b), a *NMI* must not be recorded as extinct on the *metering register* for any of the following reasons:

(i) a change of End User;

(ii) a reconstruction of the End User *supply* connection (e.g. overhead moving to underground) in which the two services are not concurrently operational;

(iii) a consolidation of *meters* (e.g. 3 *meters* to 2 *meters*) or a relocation of the *meter* enclosure without changes being made to the location of the measurement *transformers;*

(iv) changes to Participant IT systems, including ENM and LNSP *NMI* allocation systems;

(v) changes to Network Tariffs;

(vi) changes to LNSP *network* boundaries; and

(vii) changes to the identity of the ENM.

10. TNI Conventions – Grid Connected NMIs

The TNI is a four character alphanumeric code consisting of two parts.

(a) The first part is the first character of the TNI code that identifies the Jurisdiction, as follows:

A = ACT

D = NT**

N = NSW

Q = Qld

S = SA

T = Tas

V = Vic W = WA**

** *NT and WA are not participants in the NEM*

(b) The remaining three characters are the second part of the TNI code that identify a specific Transmission Node and are developed in conjunction with AEMO.

11. TNI Conventions – SAPS NMIs

The SAPS TNI is a four character alphanumeric code consisting of two parts.

(a) The first part is the first character of the SAPS TNI code that identifies the *adoptive SAPS network*, as follows:

B = Ergon Energy

C = Energex

E = Essential Energy

F = Ausgrid

G = Endeavour Energy

H = ActewAGL

J = Powercor

K = Ausnet Services

L = Jemena

M = CitiPower

P = United Energy

R = SAPN

U = TasNetworks

(b) The remaining three characters are the second part of the SAPS TNI code that identify a specific SAPS within an *adoptive SAPS network* and are developed in conjunction with AEMO.

12. Migration of Grid Connected NMIs to SAPS

(a) Where a DNSP has obtained approval to deploy a SAPS, the DNSP must:

(i) Develop a SAPS TNI code in conjunction with AEMO at least 30 *business days* before the SAPS is proposed to be operational.

(ii) Create the SAPS generator NMI(s) at least five *business days* before the proposed SAPS operational date.

(iii) Ensure the NMI Status for SAPS generator NMI(s) created in (ii) is De-energised or Greenfield, as appropriate, in MSATS until the SAPS is operational.

(iv) Apply the SAPS TNI code to the SAPS generator NMI(s) and End User NMIs within the SAPS at least five *business days* before the proposed SAPS operational date by using a prospective Change Request nominating the SAPS operational date.

(v) Advise AEMO, FRMP and MC of the proposed SAPS operational date at least 10 *business days* before the SAPS is operational.

(vi) Advise AEMO, FRMP and MC of any delay in the proposed operational date within five *business days* of recognising that the original proposed operational date would not be met.

(vii) Provide AEMO, FRMP and MC with confirmation of the actual SAPS operational date within two *business days* of the SAPS becoming operational.

13. Migration of SAPS Connected NMIs to Grid

(a) Where a DNSP proposes to remove SAPS End User NMIs from a SAPS and connect them to the *distribution network*, the DNSP must:

(i) Advise AEMO, FRMP and MC of the distribution network TNI code that will be assigned to the SAPS End User NMIs, when the SAPS End User NMIs are connected to the *distribution network,* at least 10 *business days* before the SAPS End User NMIs are connected to the *distribution network*.

(ii) Advise AEMO, FRMP and MC of the proposed *distribution network* connection date at least 10 *business days* before the SAPS End User NMIs are connected to the *distribution network*.

(iii) Apply the *distribution network* TNI code to the SAPS End User NMIs at least five *business days* before the proposed *distribution network* connection date by using a prospective Change Request nominating the *distribution network* connection date.

(iv) Advise AEMO, FRMP and MC of any delay in the proposed *distribution network* connection date within five *business days* of recognising that the original proposed *distribution network* connection date would not be met.

(v) Provide AEMO, FRMP and MC with confirmation of the actual *distribution network* connection date within two *business days* of the SAPS End User NMIs being connected to the *distribution network*.

(vi) Ensure the NMI Status for the SAPS generator NMI(s) is De-energised or Extinct, as appropriate, on the same date as the last SAPS End User NMI is connected to the *distribution network.*

Appendix A. Examples of NMI application – interval metering data

Key to symbols used in Appendix A and Appendix B:

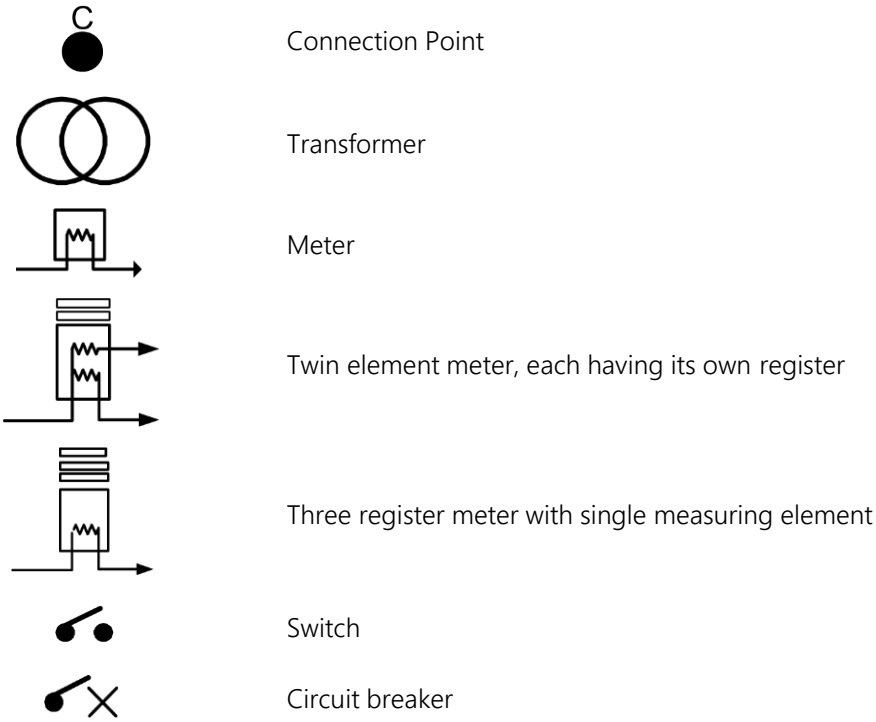

A.1 One End User metered on the secondary side of transformer

- One *connection point*
- One End User
- One *meter/measurement element*
- One NMI

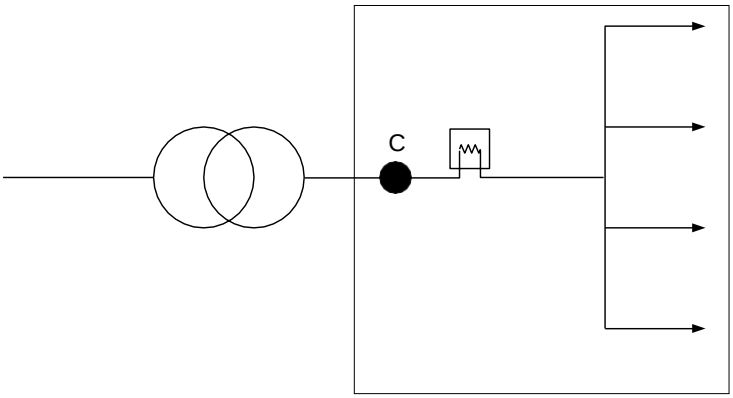

- Allocated NMI: 2424242424
- Identity of interrogated *metering data*: 2424242424 E1

A.2 One End User, multiple metered on the secondary side of transformer

- One *connection point*
- One End User
- Four *meters/measurement elements*
- One NMI

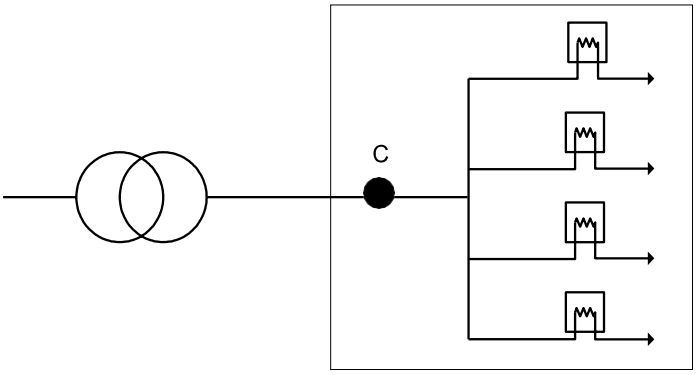

- Allocated *NMI*: 3131313131
- Identity of individual interrogated *metering data*: 3131313131 E1
  3131313131 E2
  3131313131 E3
  3131313131 E4

A.3 One End User, previously two tariff metering, e.g. general supply & off- peak on secondary side of transformer

- One *connection point*
- One End User
- Two *meters/measurement elements*
- One *meter* with a *load* control device
- One NMI

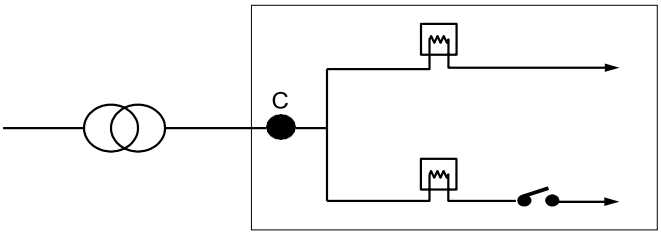

- Allocated *NMI*: 5656565656
- Identity of individual interrogated *metering data*: 5656565656 E1

5656565656 E2

A.4 One End User, two controlled loads, one twin element meter

- One *connection point*
- One End User
- Two *meters*: one twin element with a Controlled Load and one single element with a Controlled Load
- One NMI

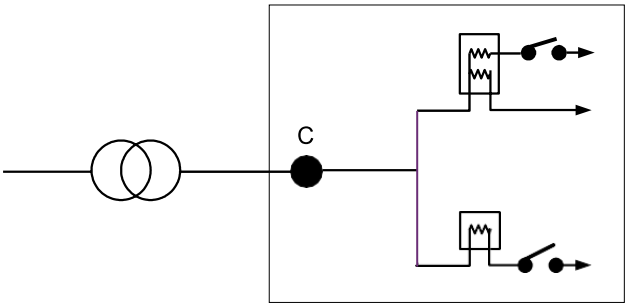

- Allocated *NMI*: 5656565656
- Identity of individual interrogated *metering data*: 5656565656 E1
  5656565656 E2
  5656565656 E3

A.5 One End User, two twin element meters

- One *connection point*
- One End User
- Two twin element *meters*
- One *NMI*

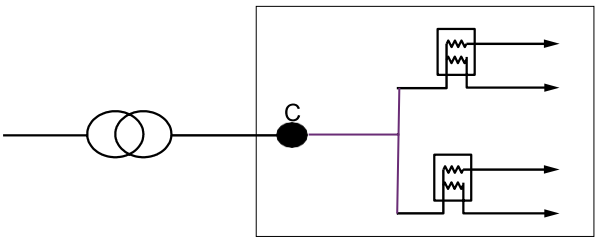

- Allocated *NMI*: 5656565659
- Identity of individual interrogated *metering data*: 5656565659 E1
  5656565659 E2

5656565659 E3
5656565659 E4

A.6 One End User, multiple meters on secondary side of multiple transformers in the same substation building an LV switchboard in common switchroom

- One *connection point*
- One End User
- Three *meters/measurement elements*
- One NMI

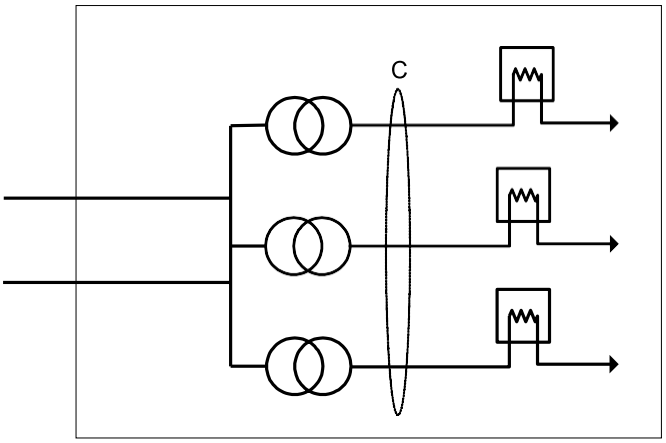

- Allocated *NMI*: 5656565656
- Identity of individual interrogated *metering data*: 5656565656 E1
  5656565656 E2
  5656565656 E3

A.7 Three End Users, metered on secondary side of multiple transformers in the same substation building

- Three *connection points*
- Three End Users
- One *meter/measurement element* per *connection point*
- Three *NMIs*

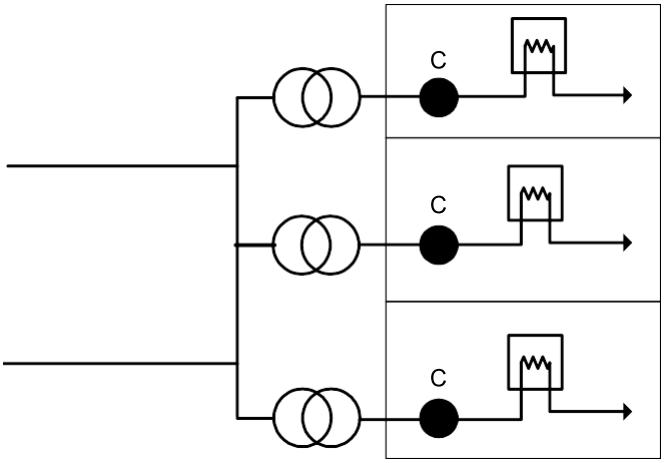

- Allocated NMIs: 5656565656
  5656565657
  5656565658
- Identity of individual interrogated *metering data*: 5656565656 E1
  5656565657 E1
  5656565658 E1

A.8 One End User, two separate HV supplies to two separate substations, both metered on secondary side of the transformers

- Two LV *connection points*
- One End User
- One *meter/measurement element* per *connection point*
- Two *NMIs*

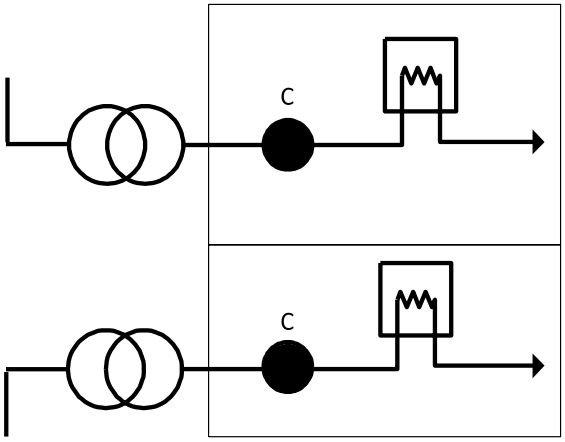

- Allocated *NMIs*: 5656565656
  5656565657
- Identity of individual interrogated *metering data*: 5656565656 E1
  5656565657 E1

A.9 One End User, two separate substations adjacent to each other or one single substation with two separate transformers in a single substation, with a "normally open" point separating the HV supplies into two sources

- Two *connection points*
- One End User
- One meter/*measurement element* per *connection point*
- Two NMIs

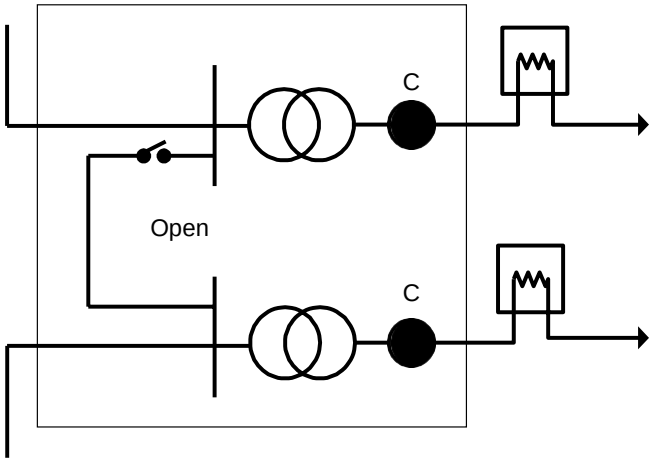

- Allocated *NMIs*: 5656565656
  5656565657
- Identity of individual interrogated *metering data*: 5656565656 E1
  5656565657 E1

A.10 One End User, two separate substations adjacent to each other or one single substation with two separate transformers, with the HV supply originating from a single source

- Two *connection points*
- One End User
- One *meter/measurement element* per *connection point*
- Two NMIs

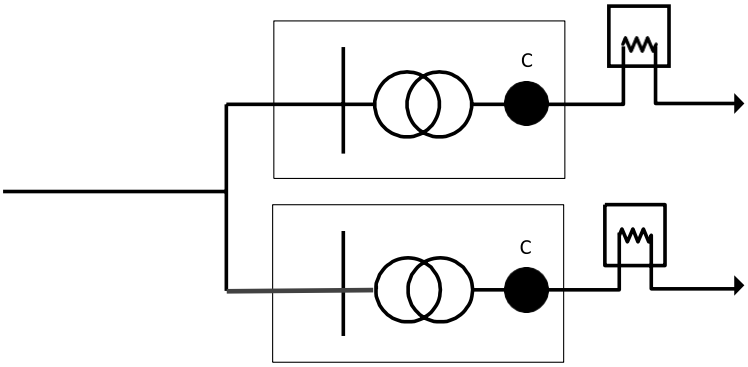

- Allocated *NMIs*: 5656565656
  5656565657
- Identity of individual interrogated *metering data*: 5656565656 E1
  5656565657 E1

A.11 One End User, two separate substations not adjacent to each other but on same premises

- Two *connection points*
- One End User
- One *meter/measurement element* per *connection point*
- Two NMIs

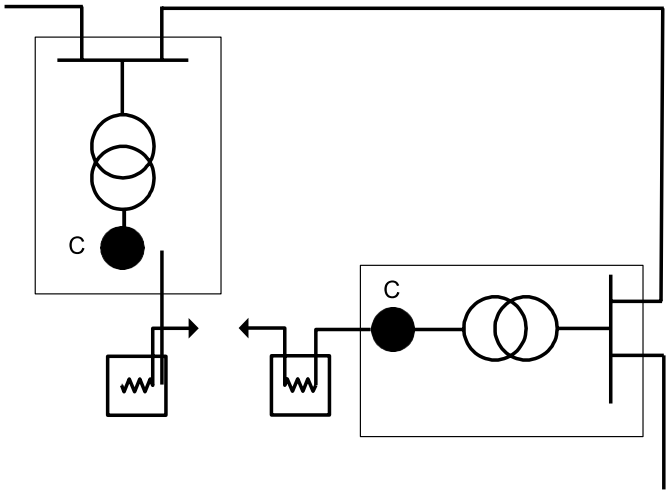

- Allocated *NMIs*: 5656565656
  5656565657
- Identity of individual interrogated *metering data*: 5656565656 E1
  5656565657 E1

A.12 Multiple End Users, High rise building

- Multiple *connection points*, with all deemed to be at physical *connection point* c in the diagram.
- Five individually metered End Users
- One *meter/measurement element* per *connection point*
- Five NMIs

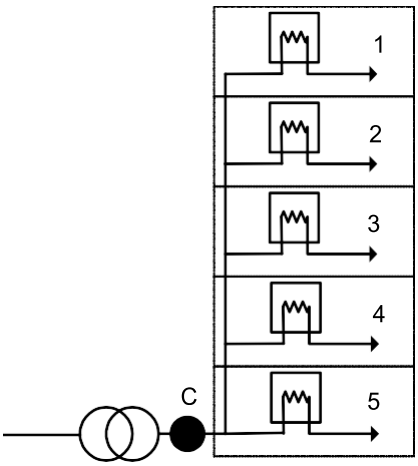

Allocated *NMIs*: 5656567801

5656987652

5656000043

5656000044

5656000045

- Identity of individual interrogated *metering data*: 5656567801 E1

5656987652 E1

5656000043 E1

5656000044 E1

5656000045 E1

A.13 One End User with multiple supply points

- Two *connection points*
- One End User
- One *meter/measurement element* per *connection point*
- Two *NMIs*.
- There are two separate *connection points*, therefore, two separate *NMIs* irrespective of whether the DLFs and supplying TNIs are the same.

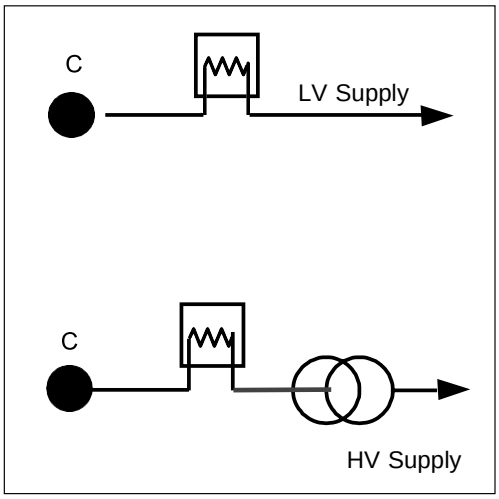

- Allocated *NMIs*: 8899778999
  8899123456
- Identity of interrogated *metering data*: 8899778999 E1
  8899123456 E1

A.14 One End User with Standby Supply

- Two *connection points*
- One End User
- One *meter/measurement element* per *connection point*
- Two NMIs
- There are two separate *connection points*, therefore, two separate *NMIs* irrespective of whether the DLFs and supplying TNIs are the same.

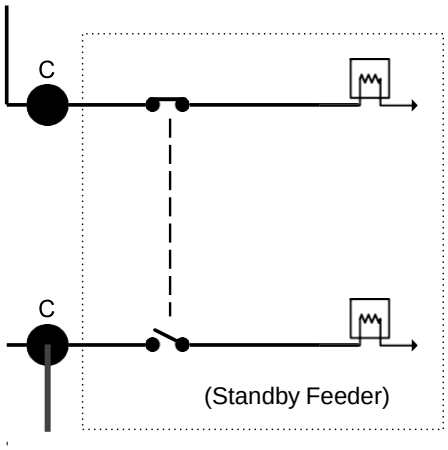

- Allocated *NMIs*: 5656333322
  5656444441
- Identity of interrogated *metering data* is 5656333322 E1
  5656444441 E1

A.15 One End User or Participant, Wholesale Metering at Transmission Node

- One *connection point*
- One End User or Participant
- Five *meters* (one *meter*/measurement element per *metering point*, with summated *transformer check metering*). Four of the *meters* are official billing *meters*, the other *meter* is for data checking and validation purposes.
- Five *NMIs*

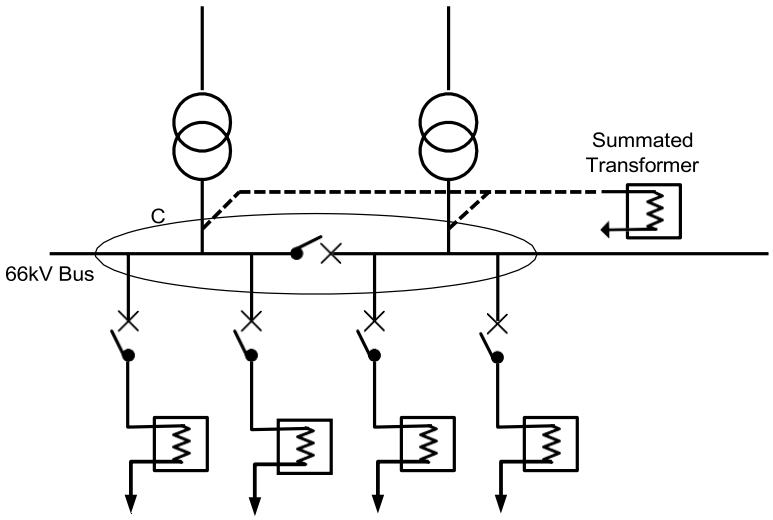

- Allocated *NMIs*: VVVVW00001
  VVVVW00002
  VVVVW00003
  VVVVW00004
  VVVVW00005
- Identity of individual interrogated *metering data*: VVVVW00001 E1
  VVVVW00002 E1
  VVVVW00003 E1
  VVVVW00004 E1
  VVVVW00005 F1

A.16 One End User or Participant, Wholesale Metering at Transmission Node

- One *connection point*
- One End User or Participant
- One physical *meter*/*measurement element* installed at different location to the wholesale boundary *connection point*.
- One logical *meter*/measurement element. The logical *meter* corrects the physical *meter* for *transmission line* and *transformer* (T/F1) losses.
- Two *NMIs*. Only the logical *meter* is recorded against the *connection point* in MSATS.

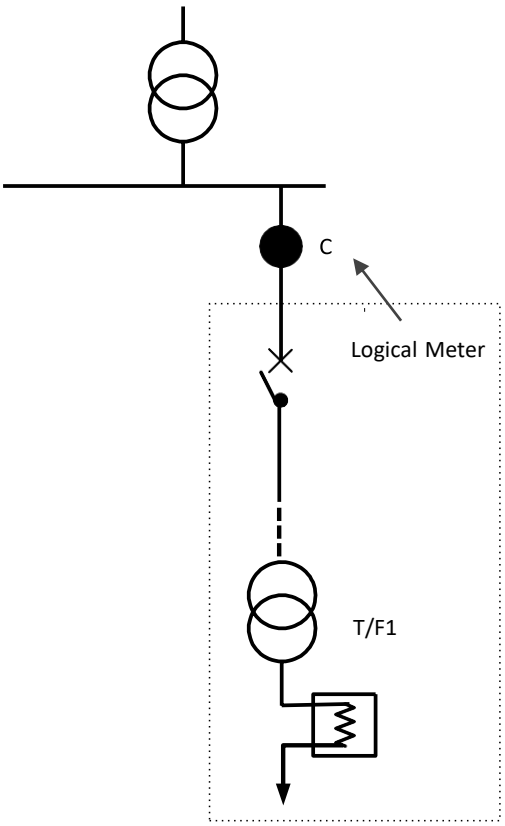

- Allocated *NMIs*: TTTTW00001
  TTTTWL0002
- Identity of individual interrogated *metering data* TTTTW00001 E1
  TTTTWL0002 E1

The audit trail of the logical *meter* is maintained through the algorithm and its reference to *metering data* from the physical *meter*.

The use of a logical *meter* must be approved by AEMO.

A.17 One End User, Wholesale Metering at Transmission Node

- One *connection point*. This is a type1 *metering installation* at a wholesale boundary point.
- One End User
- Two *meters/measurement elements*
- One *NMI*. The *NMI* is assigned to the *metering point*.

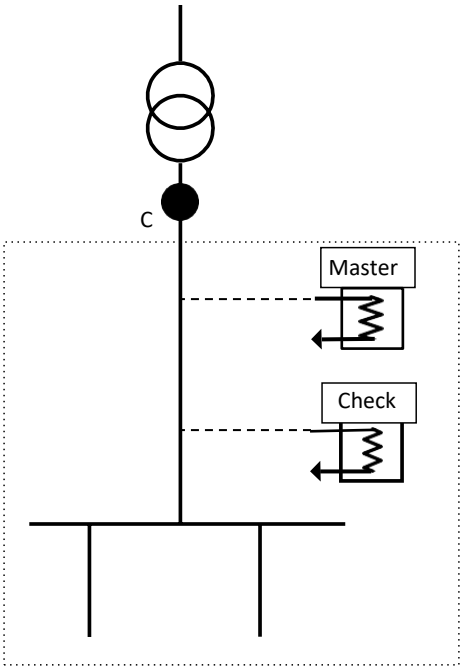

- Allocated *NMI*: TTDDW00015
- Identity of individual interrogated *metering data*:

  Master *meter* (Import) TTDDW00015 B1

  Check meter (Import) TTDDW00015 C1

A.18 Street Lighting (Type 7 Metering Installation)

- Multiple unmetered connections, one *market connection point*.
- One End User.
- One type 7 *metering installation*.
- One *NMI*.
- All lamps are supplied from a single *transmission* node.
- All lamps have the same TNI, DLF, FRMP and LNSP.

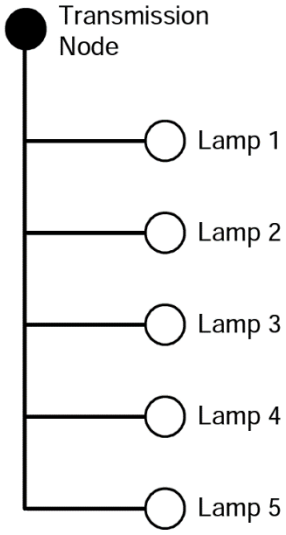

- Allocated *NMI*: 5555565656
- Identity of individual interrogated *metering data*: 5555565656 E1

A.19 CMS Type 9 Metering Installation

- Multiple metered connections, one *market connection point*.
- One End User.
- One type 9 CMS *metering installation*.
- One *NMI*.
- All nodes have the same TNI, DLF, FRMP and LNSP.
- Allocated *NMI*: ###########
- Identity of individual interrogated *metering data*: ########## E1

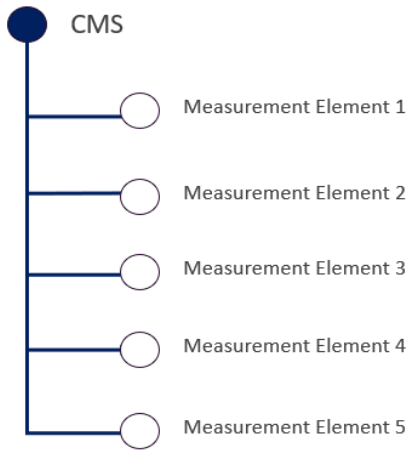

A.20 Non Contestable Unmetered Load –NMI With Single Device and NMI with Multiple Devices

- Multiple non contestable unmetered connections, multiple *market connection point*s
- All devices have the same TNI, DLF, FRMP and LNSP for a given End User
- Three End Users
- Three *NMI*s

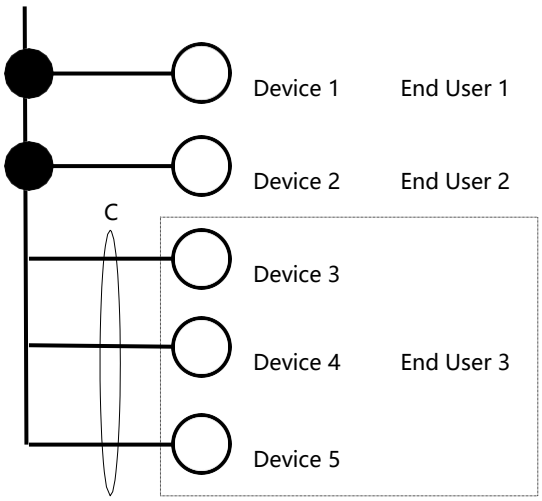

- Allocated *NMIs*: 5555666601 (End User 1)
  5555666602 (End User 2)
  5555666603 (End User 3)
- Identity of individual interrogated *metering data*: 5555666601E1
  5555666602E1
  5555666603E1

A.21 Non Contestable Unmetered Load –NMI with Single Device

- Multiple non contestable unmetered connections, multiple *market connection points*
- All devices have the same TNI, DLF, FRMP and LNSP for a given customer
- Three End Users
- Five NMIs

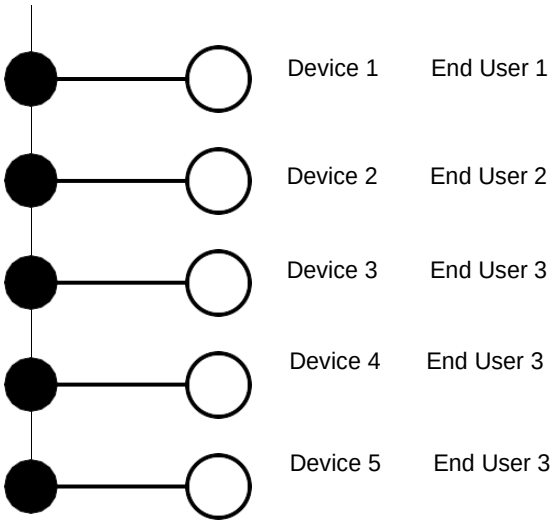

- Allocated *NMIs*: 5555666601 (End User 1)
  5555666602 (End User 2)
  5555666603 (End User 3)
  5555666604 (End User 3)
  5555666605 (End User 3)
- Identity of individual interrogated *metering data*: 5555666601E1
  5555666602E1
  5555666603E1
  5555666604E1
  5555666605E1

Appendix B. Examples of NMI application – accumulated energy data

B.1 Single Meter with Single Datastream

- Only one Datastream available, identified by 11. Only one Datastream, denoted by first character 1, and only one *meter* denoted by second character 1.

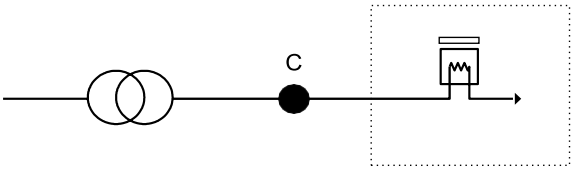

- Allocated *NMI*: 5656565656
- Identity of individual interrogated *metering data*: 5656565656 11

B.2 Two Meters each with Single Datastream

- The Datastream from the first *meter* is identified by 11, and from the second *meter* by 12.

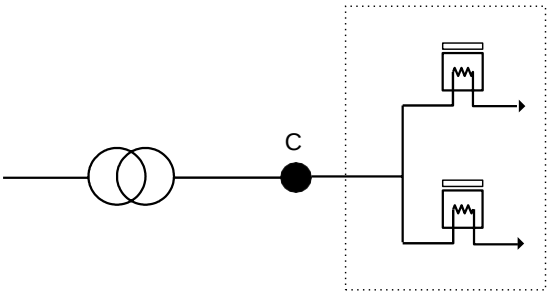

- Allocated *NMI*: 5656565656
- Identity of individual interrogated *metering data*: 5656565656 11

  5656565656 12

B.3 Two Meter Installation, One Meter Recording Consumption for a Controlled Load

- The data for *meter* one is from the first Datastream, hence suffix 11.
- The data for *meter* two is from the first Controlled Load Datastream, hence suffix 42.

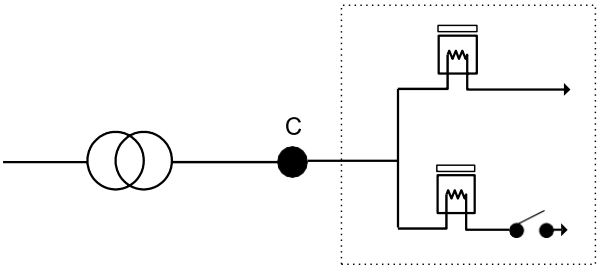

- Allocated *NMI*: 5656565656
- Identity of individual interrogated *metering data*: 5656565656 11

  5656565656 42

B.4 Three Datastream, One Meter with Single Measurement Element

- The *meter* has a three-rate Datastream (high, shoulder, and low rates). As there is only one *meter*, each of the suffixes will have the final character set to 1 to denote that the *metering data* has originated from the same *meter*.
- Each Datastream is numbered as the reader loads *metering data* from them – for a mechanical three- rate Datastream, from top to bottom, or left to right, and for an electronic Datastream in the order in which they scroll.

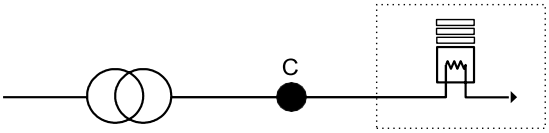

- Allocated *NMI*: 5656565656
- Identity of individual interrogated *metering data*: 5656565656 11

  5656565656 21

  5656565656 31

B.5 Multi-function Meter

- Multi-function *meter* with two *measurement elements*.
- Each *measurement element* has a single *energy* Datastream, which requires two data suffixes. As there is only one *meter*, each of the suffixes will have the final character set to 1 to denote that the *metering data* has originated from the same *meter*. The Controlled Load data will be denoted by a 41 as originating from the first Controlled Load Datastream, and the continuous circuit will be denoted by 11.

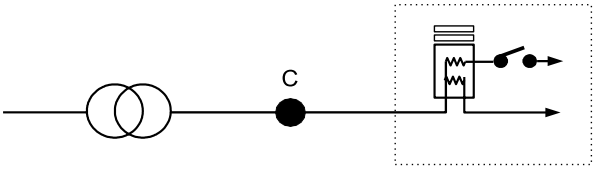

- Allocated *NMI*: 5656565656
- Identity of individual interrogated *metering data*: 5656565656 11
  5656565656 41

B.6 Two Multi-function Meters

- Two multi-function *meters* where the controlled circuits have the same switching control.

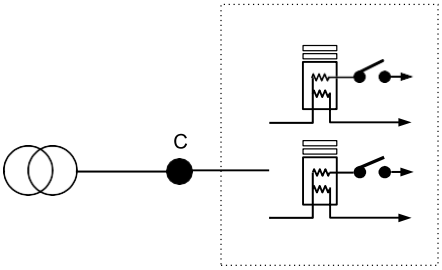

- Allocated *NMI*: 5656565656
- Identity of individual interrogated *metering data* (*meter* 1): 5656565656 11
  5656565656 41
- Identity of individual interrogated *metering data* (meter 2): 5656565656 12
  5656565656 42

Appendix C. Sample Java code for NMI Checksum

```
/**
* Calculates a LUHN-10.
* <PRE>
* 1. Double the value of alternate digits beginning with the rightmost digit
* 2. Add the individual digits comprising the products obtained in step 1 to each of the
  unaffected digits in the original number.
* 3. Find the next highest multiple of 10
* 4. The check digit is the value obtained in step 2 subtracted from the value obtained in step 3.
* 5. END
* </PRE>
*/
public class LUHN10
{
/**
* Value to indicate we have not calculated the luhn yet.
*/
private static final int NULL_VALUE = -1;
/**
* Buffer holding the sequence of digits to use in the calculation.
*/
private StringBuffer _buffer;
/**
* The cached value for the luhn.
*/
private int _luhn;
/**
* Constructor.
*/
public LUHN10()
{
reset();
```

```
}
/**
* Resets the calculator to its initial values.
*/
public void reset()
{
_buffer = new StringBuffer();
_luhn = NULL_VALUE;
}
/**
* Updates the LUHN-10 with specified digit.
*/
public void update(char d)
{
// Append the character
_buffer.append(d);
// And, reset the cached luhn
_luhn = NULL_VALUE;
}
/**
* Returns the current LUHN-10 value.
*/
public int getValue()
{
if (_luhn == NULL_VALUE)
{
int v = 0;
boolean multiply = true;
for (int i = _buffer.length(); i > 0; i--)
{
int d = (int)_buffer.charAt(i - 1);
if (multiply)
{
```

```
d *= 2;
}
multiply = !multiply;
while (d > 0)
{
v += d % 10;
d /= 10;
}
}
_luhn = (10 - (v % 10)) % 10;
}
return _luhn;
}
public static void main(String[] args)
{
if (args.length == 0)
{
System.out.println("USAGE: LUHN10 nmi");
}
else
{
LUHN10 luhn = new LUHN10(); String nmi = args[0];
for (int j = 0; j < nmi.length(); j++)
{
luhn.update(Character.toUpperCase(nmi.charAt(j)));
}

System.out.println(nmi + "/" + luhn.getValue());
}
}
}
```

Appendix D. Example of NMI Checksum calculation

This Appendix contains a worked example of the NMI Checksum calculation. An alphanumeric *NMI* is used in the example to illustrate the algorithm's ability to handle all characters that have an ASCII equivalent.

The logic of the algorithm can be summarised as:

Process each character in the *NMI* individually, starting with the right most. For each character:

a) Convert the character to its ASCII value

b) For the right most character and every second character reading left, double the ASCII value obtained in Step (a).

c) Add the individual digits of the ASCII value to a register holding the total added value for the NMI Checksum.

Subtract the total added value register from the next highest multiple of 10. If the result is 10, the checksum is 0, otherwise the result is the NMI Checksum.

The *NMI* for the following worked example is: 1234C6789A Step 1. Initialise variables used by the process.

Double_This_Char

is a boolean that indicates whether the character currently being processed should be doubled.

Char

is the character currently being processed as it appears in the *NMI*.

ASCII_Char

is the ASCII value of Char

Total

is the running sum of the digits generated by the algorithm.

NMI Checksum

is the final result. At the start of the process:

Double_This_Char = True

because the right most character, and then every second character, is doubled by the algorithm. Total = 0

Checksum = NULL

Step 2. Read the *NMI* character by character, starting with the right most character.

Char = A

Step 3. Convert the character to its ASCII value. ASCII_Char = 65

Step 4. Double the ASCII value if the character is the right most of the *NMI* or an alternate. ASCII_Char = 130

Double_This_Char = Not Double_This_Char

Step 5. Add the individual digits of the ASCII value to the Total After. Total = Total + 1 + 3 + 0 (i.e. Total = 4)

Performing steps 2 to 5 for each character in our example *NMI* gives the following results:

Table 3 Example NMI Results

Character	Total Before	ASCII Value	Double?	Doubled Value	Total After
A	0	65	Y	130	4 (0+1+3+0)
9	4	57	N	57	16 (4+5+7)
8	16	56	Y	112	20 (16+1+1+2)
7	20	55	N	55	30 (20+5+5)
6	30	54	Y	108	39 (30+1+0+8)
C	39	67	N	67	52 (39+6+7)
4	52	52	Y	104	57 (52+1+0+4)
3	57	51	N	51	63 (57+5+1)
2	63	50	Y	100	64 (63+1+0+0)
1	64	49	N	49	77 (64+4+9)

The value of 'Total After' processing the *NMI* is 77.

The next highest multiple of 10 is 80.

Checksum = 80 –77 = 3.

Further examples: NMIs and Associated Checksums

The following thirty NMI Checksums were calculated by AEMO from the *NMIs* listed in Table 4. The *NMIs* and NMI Checksums are provided to assist Participants in checking their implementation of the NMI Checksum algorithm.

Table 4 NMIs and NMI Checksums

NMI	NMI Checksum	NMI	NMI Checksum
2001985732	8	QAAAVZZZZZ	3
2001985733	6	QCDWW00010	2
3075621875	8	SMVEW00085	8
3075621876	6	VAAA000065	7
4316854005	9	VAAA000066	5
4316854006	7	VAAA000067	2
6305888444	6	VAAASTY576	8
6350888444	2	VCCCX00009	1
7001888333	8	VEEEX00009	1
7102000001	7	VKTS786150	2

NMI	NMI Checksum	NMI	NMI Checksum
NAAAMYS582	6	VKTS867150	5
NBBBX11110	0	VKTS871650	7
NBBBX11111	8	VKTS876105	7
NCCC519495	5	VKTS876150	3
NGGG000055	4	VKTS876510	8

Appendix E. Examples of NMI Classification Code application

Table 5 Examples of NMI Classification Code application

Diagram	Description
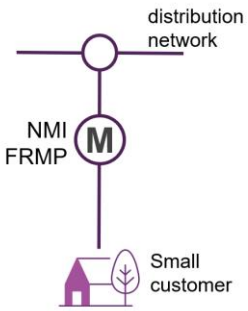	**Description of connection point:** Small retail customer (which may or may not be a micro resource operator with all net generation sold to retailer) **NCC:** SMALL **FRMP:** Retailer – Market Customer (or Integrated Resource Provider (IRP) Market Customer)
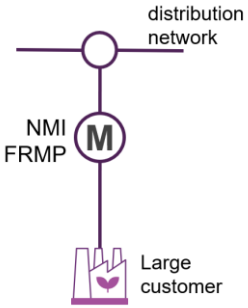	**Description of connection point:** Large retail customer **NCC:** LARGE **FRMP:** Retailer – Market Customer (or IRP Market Customer)

Diagram	Description
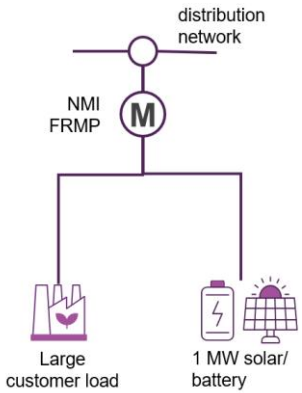	**Description of connection point:** Large customer connection point with exempt generation onsite (NOT a *small resource connection point* as there is load onsite unrelated to the small bidirectional unit/small generating unit), all net generation sold to retailer **NCC:** LARGE **FRMP:** Retailer – Market Customer (or IRP Market Customer)
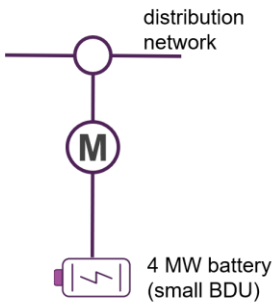	**Description of connection point:** *Small resource connection point* comprising a 4 MW exempt battery (small BDU) **NCC:** NREG **FRMP:** IRP Small Resource Aggregator (could also be Market Customer)

Diagram	Description
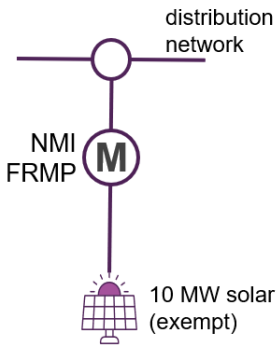	**Description of connection point:** S*mall resource connection point* comprising a *small generating unit* (exempt via application to AEMO) **NCC:** NREG **FRMP:** IRP Small Resource Aggregator (could also be Market Customer)
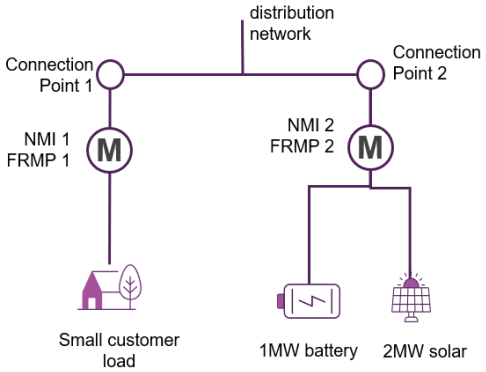	**Description of connection point:** CP1 = small customer CP2 = *small resource connection point* with a *small BDU* and *small generating unit* **NCC:** CP1 = SMALL; CP2 = NREG **FRMP:** CP1 = Retailer – Market Customer (or IRP Market Customer); CP2 = IRP Small Resource Aggregator (could also be a Market Customer)

Diagram	Description
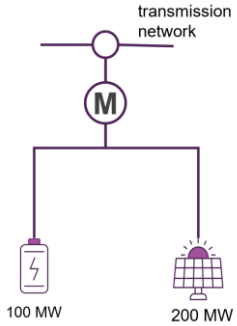	**Description of connection point:** Registered *integrated resource system* connected to a *transmission network* **NCC:** TIRS **FRMP:** IRP
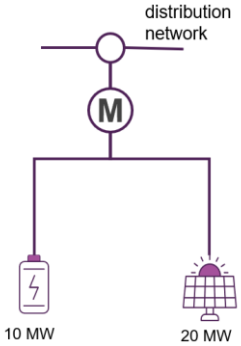	**Description of connection point:** Registered *integrated resource system* connected to a *distribution network* **NCC:** DIRS **FRMP:** IRP

Diagram	Description
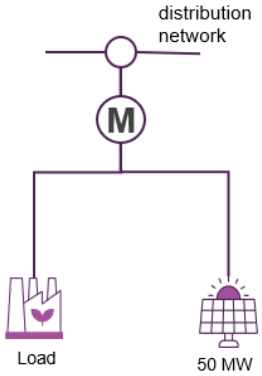	**Description of connection point:** Registered *integrated resource system* (generating unit + load) connected to a *distribution network* **NCC:** DIRS **FRMP:** IRP
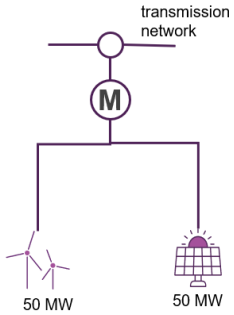	**Description of connection point:** Registered g*enerating system* connected to a *transmission network* **NCC:** GENERATR **FRMP:** Market Generator (or IRP Market Generator)

Diagram	Description
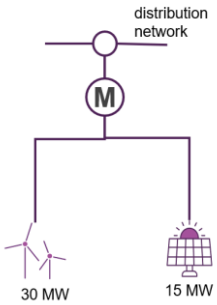	**Description of connection point:** Registered *generating system* connected to a *distribution network* **NCC:** DGENRATR **FRMP:** Market Generator (or IRP Market Generator)
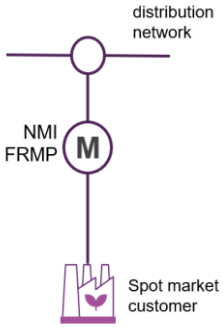	**Description of connection point:** Spot market customer connected to a *distribution network* **NCC:** DWHOLSAL **FRMP:** Market Customer or IRP

Diagram	Description
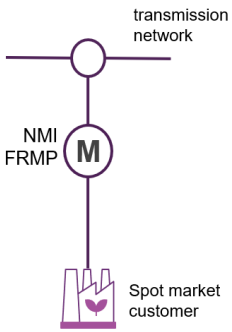	**Description of connection point:** Spot market customer connected to a *transmission network* **NCC:** WHOLESAL **FRMP:** Market Customer (or IRP Market Customer)

Version release history

Version	Effective Date	Summary of Changes
7.4	31 May 2026	Updated to implement the National Electricity Amendment (Unlocking CER benefits through flexible trading) Rule 2024 No. 15 – type 9 metering installations
7.3	15 November 2024	Updated as part of the CATS and WIGS procedures amalgamation.
7.2	2 June 2024	Updated to incorporate National Electricity Amendment (Integrating energy storage systems in the NEM) Rule 2021 Replacement of Appendix E with new diagrams illustrating application of NMI Classification Codes
7.1	30 May 2023	Update to incorporate changes resulting from the AEMC's Updating the Regulatory Frameworks for Distributor-Led Stand-Alone Power Systems (EMO0038) review.
7.0	1 July 2021	Updated to incorporate: National Electricity Amendment (Five Minute Settlement) Rule 2017 No. 15 and National Electricity Amendment (Global Settlement and Market Reconcilliation) Rule 2018 No 14
6.0	01 Dec 2017	Updated to incorporate changes resulting from: National Electricity Amendment (Expanding competition in metering and related services) Rule 2015. No.12; National Electricity Amendment (Embedded Networks) Rule 2015 No. 15; and National Electricity Amendment (Meter Replacement Processes) Rule 2016 No. 2
	August 2009	Update to AEMO format
	16/07/2006	Added changes agreed as part of the CATS 2.4 MSATS Procedures: CATS Procedures Part 1 Principles and Obligations Version 2.4 that were missed from version 4. This includes the removal of the zero first character row from the consumption energy Data Suffix table. Added Amps to the Volts row of Table 1. Updated diagrams to a consistent format. Added diagrams of twin element interval meters at sections 12.4 and 12.5. Removed diagram of accumulation and interval metering at a site. Amendments to reflect changes developed as part of the Metrology Harmonisation project, including the development of the NEM Metrology Procedure. Relocated version history. Minor typographical amendments and corrections.