GAS FRC B2B CONNECTIVITY TESTING AND SYSTEM CERTIFICATION

PREPARED BY: MARKET PERFORMANCE

DOCUMENT REF: 308011

VERSION: 1.6

DATE: 1 JULY 2010

FINAL

Version History

Version	Date	Author(s)	Changes and Comments
0.1	23/4/2002	Sid Mishra	First draft
0.2	24/5/2002	Neil Belford	Total rewrite
0.3	8/8/2002	Peter Martin	Added description of certification user interface; source of authority to certify. Document now reflects ability to certify on an individual transaction basis, rather than by transaction group.
1.0	27/8/2002	Peter Martin	Incorporated participant feedback.
1.1	11/9/2002	Darren Field	Added information on Certify and Sandpit ParticipantIDs.
1.2	28/11/2003	Peter Alberts	Update reference to the Victorian Retail Market Rules & remove references to SMTP, remove references to specific versions for ebXML
1.3	5/2/2004	Darren Field	Updated request form. Updated e-mail sample. Removed references to S/MIME.
1.4	1/3/07	D. McGowan / M. Riley	General re-write and updating of document.
1.5	14/10/08	S. Monaco	Update to Appendix D – Form of AEMO Certification Checklist
1.6	1/07/2010	D. McGowan	Ensure document conforms to AEMO standard Add References to Predecessors

Table of Contents

Reference Documents 3
Responsibilities 3

1. Background 4

2. Introduction 6

2.1. Outcomes of Certification 6
2.2. Authority to certify 6
2.3. Certification Environment 6
2.4. Hub User Id 7
2.5. Criteria for certification and re-certification. 7
2.6. Pre-requisites for Certification 7

3. Preparation for Certification 8

3.1. Certification Window 1 – Messaging 8
3.2. Certification Window 2 – Transactions 9
3.3. Certification Notification 9
3.4. Participant Re-Certification 10
3.5. At the Participants Request 10
3.6. At the Request of the FBSA 10
3.7. Blocking a Participant 11
3.8. Certification User Interface 11

4. Certification Process 12

4.1. Communicating with Retail Rules Administrator and Hub Administrator 12
4.2. Steps in Certification Process 12
4.2.1. Notify AEMO 12
4.2.2. Complete Registration Form 13
4.2.3. AEMO Confirms Eligibility 13
4.2.4. FBSA Receives the Registration Forms 13
4.2.5. Supply Certificates 13
4.2.6. Configure Gateway 13
4.2.7. Run Certification Scripts 13
4.2.8. Review Results 14
4.2.9. Outcome of Review 14
4.2.10. Review Results and Adjust 14
4.2.11. Inform Participant & AEMO 14
4.2.12. Authorise Participant to use Hub 14
4.2.13. Participant Certified and Authorised to use Hub 15

Appendix A: CSV Certification 16

Appendix B: Certification Profile 17

Appendix C – Form of Authorisation from AEMO 19

Appendix D – Form of AEMO Certification Checklist 20

Reference Documents

Document	Available from
FRC Hub Operational Terms and Conditions	AEMO website
Gas Interface Protocol	AEMO website
Retail Market Procedures (clause 1.2.5 – FRC HUB).	AEMO website
Participant Build Packs	AEMO website
Technical Supplement to the Victorian Retail Market	AEMO website
FRC Gas Hub Participant User Guide	AEMO website

References to Predecessors

To reflect the governance changes implemented on 1 July 2009, this document has been amended to remove references to the Victorian Energy Networks Corporation (VENCorp) and replace such references with Australian Energy Market Operator (AEMO). Where any content inadvertently refers to VENCorp it should be read as referring to AEMO.

In relation to the aseXML schema, it should be noted that participant ID "VENCORP" remains as the participant ID for AEMO as the gas market operator in Victoria and Queensland.

Responsibilities

FRC Hub Administrator

The FRC Hub Administrator (AEMO) is responsible for operational management of the FRC Hub and provision of Certification Services. This includes:

- Provision and maintenance of a certification environment
- Review and reporting of certification tests

E-mail: FBSAdmin@AEMO.com.au

Phone: AEMO Helpdesk (03) 9648 5335

Retail Market Procedures Administrator

The Retail Market Procedures Administrator (AEMO) is the person responsible for issuing advice on whether certification has been successfully completed. This is done in consultation with AEMO IT application support.

E-mail: gas.helpdesk@AEMO.com.au

Phone: 1300 858 724

1. Background

The FRC Hub is a communications gateway that passes electronic messages between businesses within the gas industry as shown in Figure 1. These messages cover various transactions, such as account creation, customer transfer notification and meter data information.

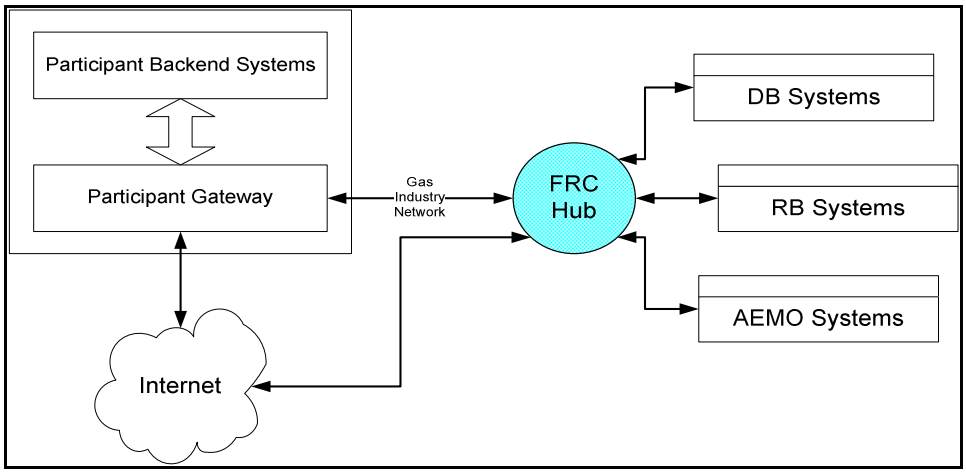

Figure 1 – FRC Hub Connectivity Diagram

These transactions must be created in a specific form. Some transactions are simply aseXML, while others are csv files enclosed in an aseXML transaction. These are then transmitted in an ebXML message as shown in Figure 2.

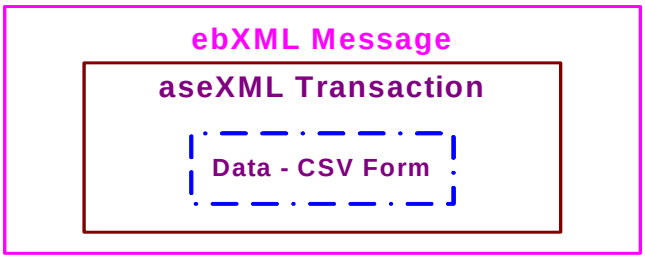

Figure 2 – FRC Transaction formats

To be a Market Operator, Retailer or Distributor within AEMO operated markets, participants are required to be able to send transactions through the FRC Hub to other businesses and receive transactions from other businesses using their applicable Business Systems through a designated messaging Gateway.

So that they can conduct business successfully, Participants provide assurance to other industry participants that transactions will be correctly created, prepared, sent and received between their gateway and the FRC Hub. This assurance is partly achieved by having Participants validate their transactions via a testing environment that checks the form of the transaction against a set of well-formed, pre-determined transactions.

This procedure is called certification. Certification confirms Participant's Business Systems and Gateway are certified and remain certified while they are a licensed Participant.

The complete list of transactions is detailed within the Gas Interface Protocol (available from the AEMO website), which provides a specification of the transactions that are undertaken within the gas industry. Appendix B provides a list of transactions that each type of Participant must certify against.

2. Introduction

AEMO has contracted the FRC B2B System (FBS) Administrator to operate and administer the process for certifying participants in the AEMO operated gas retail markets. The FBS Administrator (FBSA) confirms that an applicant can satisfactorily connect to, and interoperate with the FBS in accordance with the interface specifications and architectural standards defined in Participant Build Packs 2 and 3.

This certification is purely technical in nature. It does not imply that the applicant may participate in markets operated by AEMO. Until an appropriate participant status is granted by the AEMO Retail Market Procedures Administrator, the applicant may not use the production system operated by the FBSA. The FBSA controls the participant's ability to send and receive transactions through the hub, while AEMO provides business authorisation.

A Participant Id uniquely identifies an application for certification of a gateway to the FBS. It is this Participant Id, and therefore the gateway to which the identity applies, that is certified by this process. Should an organisation use more that one Participant Id, each of those Participant Id's will need to be separately certified by this process.

2.1. Outcomes of Certification

Certification to connect with the FBS means that the participants are able to:

- Connect to the FRC Hub using SSL, either via the Internet or the Hansen's Gas Network;
- Send well-formed ebXML messages that conform to the ebXML Message Services Specification (latest version as implemented by the HUB operator and as published by the FBSA and the Gas Interface Protocol (GIP) artefact - FRC B2B System Architecture and Specifications document;
- Send documents that conform to the current aseXML schema and the validation rules described in the GIP artefacts contained in Participant Build Packs 2 and 3 as published on the AEMO website from time to time; and
- Send well formed CSV data.

2.2. Authority to certify

AEMO's authority to conduct certification processes across the FBS arises from the Participant obligation to comply with AEMO's HUB Terms and Conditions and the obligation to certify as specified in the Victorian Retail Market Procedures

2.3. Certification Environment

FBSA have developed an environment to be used for testing and certification by participants. The details of this environment are in the FRC Gas Hub Participant User Guide, available on the AEMO website at: http://www.aemo.com.au

2.4. Hub User Id

In order to be able to access the FRC Hub for certification participants need a retail Hub ID provided by AEMO. Before a Participant can be issued with a User ID it needs to be registered with AEMO.

2.5. Criteria for certification and re-certification.

As mentioned above, AEMO's FRC Hub Operational Terms and Conditions sets out when a Participants needs to certify and recertify. In relation to re-certifying, Section 3.4 Participant Re-Certification provides further guidelines about when a Participant should request re-certification.

Further information about whether a Participants needs to certify or re-certify and the level of certification required can be obtained by contacting the AEMOs Retail Market Procedures Administrator via: gas.helpdesk@aemo.com.au.

2.6. Pre-requisites for Certification

Applicants will need to create and register a gateway and back end system for testing and connect it to the FRC Gas Test Hub to enable certification to take place. Instructions for gateway registration and connection are contained in the FRC Gas Hub Participant User Guide, available on the AEMO website at: http://www.aemo.com.au

Certified participants will be required, at short notice, to incorporate these new Participant Id's into their systems as and when the need arises. These updates are required to be implemented as soon as possible and not delayed for any reason.

Communication of new Participant Id's, and any other information relevant to the operation of the FBS will be via e-mail. These messages will be sent to the communications mailbox nominated when participants register.

3. Preparation for Certification

Applicants will follow these steps to be eligible for certification:

- Applicants obtain the relevant Build Packs containing process flows, interface definitions and details of system architecture from AEMO. The Build Packs are available from the AEMO website: www.AEMO.com.au
- Applicants obtain an FRC Gas Hub Participant User Guide and Registration Form from AEMO website or FBSA by e-mail
- Prior to registering Participants should discuss with AEMO Retail Market Procedures Administrator and confirm details via e-mail;
- Participants should discuss requirements with FBS Administrator and then register their intention to undertake certification by e-mail;
- Applicants connect their Test Gateway to the FRC Test Hub by following the instructions in the FRC Gas Hub Participant User Guide.
- The FBS Administrator will make available a 'Sandpit' environment for preliminary testing prior to formal certification. Applicants will use this environment to test their systems to prepare for formal certification.
- Applicants will arrange a time with the FBS Administrator to perform the certification process. This is an important step in the procedure. For FBS Administrator to be able to effectively analyse the results of a certification process it needs to know when the participant started and stopped sending transactions for certification.
- The applicant will then use the Certification environment to formally certify. Two stages of formal testing will be conducted by the applicant. These stages are described as Window 1, and Window 2. An applicant will need to have successfully completed Window 1 before commencing Window 2.

3.1. Certification Window 1 – Messaging

All applicants need to certify against all the components of Window 1. The scripts for these processes fall into three groups. They are

1. Applicants will establish ebXML-messaging capability over SSL.
2. Applicants will establish digital signature capability on messages.
3. Applicants will establish reliable messaging capability on messages.

Test scripts for Window 1 tests are published by FBS Administrator on its certification user interface. These scripts will not provide XML for participants to run but will describe the purpose and steps of each test.

3.2. Certification Window 2 – Transactions

In Window 2 applicants will carry out some generic aseXML certification tests, as well certifying specific transactions that they need to pursue according to their role in the industry. Distributors will certify against a different set of Transactions to Retailers.

Applicants can nominate which aseXML transactions they wish to be certified for by using the certification user interface. The interface groups the transactions according to aseXML transaction groups but does not force an applicant to certify for an entire group. Individual transactions can be selected within groups.

Test scripts for Window 2 generic aseXML tests are published by FBSA on its certification user interface.

Scripts for other Window 2 transaction tests have not been published. Each transaction test takes the same format:

- The initiator (either the applicant or the Certification Responder) sends the transaction
- The receiver sends an ebXML acknowledgement
- The receiver sends an aseXML transaction acknowledgement
- The initiator sends an ebXML acknowledgement.

Appendix A provides some additional information regarding aseXML transactions that contain CSV content.

NB *– The test environment does not have the same processing capabilities as the production environment, so test transactions should not have more than 100 rows of CSV data in any transaction.*

Appendix B provides a list of transactions that each type of Participant must certify against.

Detailed descriptions of each transaction are contained within the Participant Build Packs which are available from the AEMO website.

3.3. Certification Notification

When these procedures have been completed, the applicant will advise the FBSA, who will review the results of the certification process. When an applicant has been successful, the FBSA will certify that on a technical basis, they are eligible to participate in the Victorian Gas Market, using the transactions for which they have been certified. The FBSA will produce a report advising the applicant and AEMO of the results of the certification process and the eligibility status of the applicant.

Note: This certification is purely technical in nature. It does not imply that the applicant may participate in retail markets operated by AEMO. Until an appropriate participant status is granted by the AEMO Retail

Market Procedures Administrator, the applicant may not use the production system operated by the FBSA.

3.4. Participant Re-Certification

While the reasons for re-certification may vary, the process used for certification or re-certification does not change.

The Participant is responsible for selecting the transactions that they wish to test against. However, participants who require partial re-certification should discuss the matter with the AEMO Retail Market Procedures Administrator before proceeding with the re-certification.

Participants should then advise the FBS Hub Administrator of the transactions they wish to re-certify against.

3.5. At the Participants Request

A participant may request re-certification for all or part of their certification set if they believe this to be necessary to continue sending & receiving gas transactions. The FBSA recommends that if any of the following occur an applicant should request re-certification:

1. They change their firewall configuration.
2. They relocate their gateway Message Service Handler (MSH).
3. They change the hardware or software platform on which their gateway MSH is deployed.
4. They make major changes in application services behind the gateway.
5. They make any other changes that might reasonably be considered to render their current certification invalid.

Ultimately it is up to each certified participant to ensure that their certification remains valid after any configuration changes, such as those above.

3.6. At the Request of the FBSA

FBSA may request re-certification on any part of the certification process by participants in the event of:

1. FRC Hub functionality changes and upgrades;
2. FRC B2B System Specification changes;
3. aseXML schema changes;
4. X.509 certificate revocations.
5. Participant gateway changes.

For re-certification, all or part of the certification process will apply, as is appropriate to the circumstances at hand.

3.7. Blocking a Participant

It may be the case that after certification, for a variety of reasons, both predictable and unpredictable, a Participant begins sending non-conforming material through the FBS. In this instance, the FBSA may need to block those types of messages that are non-conforming.

If more than one Participant or AEMO informs the FBSA that at least 100 instances of badly formed aseXML have been received from a participant; or if that Participant is failing to comply with the requirements of FBS reliable messaging or the FBS non-repudiation strategy, the FBSA will:

- Request a copy of the badly formed messages from recipients.
- Advise the Participant of the need for re-certification for particular transaction groups, or for re-certification of some or all of the more fundamental messaging capabilities.
- Request the Participant to undertake the certification process again for the relevant transaction group within 5 business days of receiving the request.
- In the event that a Participant does not comply with a re-certification request or is not able to successfully re-certify, then AEMO will cancel the Participant's certification for the specific transaction groups in which they are failing until the Participant is re-certified and the FBSA may block participants from using the hub.

This "blocking" of transactions is not a physical rejection but is policed by audit. If the FBSA's audit process detects a participant sending transactions for which it is not currently certified, the FBSA will contact the offending participant for an explanation. If the explanation is deemed to be unsatisfactory or if the Participant continues to send transactions for it is not currently certified the breach will be reported to the relevant regulator (the offending Participant will be informed of the FBSA’s advice to the relevant regulator).

3.8. Certification User Interface

AEMO has developed a browser-based user interface to assist participants in their certification. The FRC Hub Participant User Guide describes the interface in detail.

4. Certification Process

This section describes the process through which organisations wishing to participate in the AEMO operated Retail Markets can achieve technical certification. This applies to new Participants wishing to certify their systems for the first time and existing Participants whose systems have been changed who are required to re-certify their systems to continue using the FBS.

There are a variety of scripts that an applicant must run to demonstrate that they are capable of interoperating. These fall into two windows, the messaging capabilities being the first, and the transaction capabilities being the second.

The diagram below shows the certification process that must be undertaken for a new or existing participant to have their systems certified.

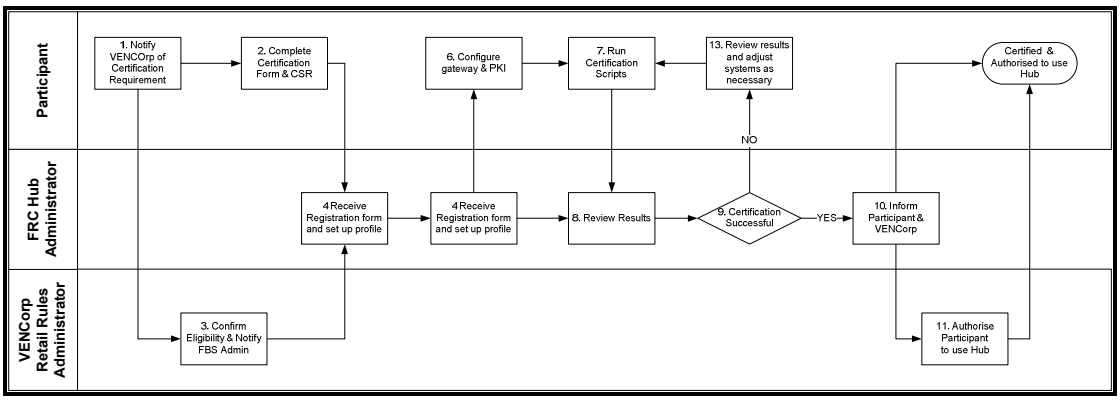

Figure 1 – B2B System Registration and Certification Process

4.1. Communicating with Retail Rules Administrator and Hub Administrator

Initial contact with the Retail Market Procedures Administrator or the FBS Hub Administrator should be preferably made via telephone. However, to ensure that there are records of key steps during the certification / re-certification process confirmation of key issues should be made via e-mail.

Contact details for the Administrators are available at the front of this document.

4.2. Steps in Certification Process

4.2.1. Notify AEMO

The first step in the certification process is for the Participant to confirm with AEMO that the Participant is about to start the certification process. In

the case of new Participants or significant upgrades to existing gateways, Participants must fully certify their gateways. In the case of smaller changes Participants should discuss the changes with AEMO to determine what transactions they may be required to re-certify.

4.2.2. Complete Registration Form

Participants would then notify the FBSA and complete the registration forms provided by the FBSA. This provides the FSA with a request to provide a test environment be made available to commence the certification process.

4.2.3. AEMO Confirms Eligibility

AEMO will confirm the Participant's eligibility to undertake the certification process and advise the FBSA of any additional requirements or derogations that are relevant to the participant (eg reduced set of transactions required to be certified).

4.2.4. FBSA Receives the Registration Forms

The FBSA receives the registration forms from the Participant and advice from AEMO regarding the Participants eligibility to undertake the Certification process.

The FBSA will make a test environment available, so that the Participant can run the responder scripts to test their gateway. If a full certification set is not required Participants must advise FBSA of the subset of transactions that will be certified.

4.2.5. Supply Certificates

The FBSA will advise the Participant that the test environment is available for the participant to undertake the Certification process.

If necessary, the FBSA will provide the necessary security certificates for the Participant to undertake the Certification process.

4.2.6. Configure Gateway

The participant would then configure their gateway and relevant back-end systems in preparation for undertaking the certification

4.2.7. Run Certification Scripts

The Participant would then run the various scripts as specified and identify any issues that may arise.

The Participant would then complete a Certification Checklist, available from the AEMO website at www.aemo.com.au, and email to the FBSA to request review.

4.2.8. Review Results

The FBSA will review the results of the test scripts and determine whether the Participant has completed the test scripts successfully.

4.2.9. Outcome of Review

The FBSA determines whether or not the Participant has successfully completed the test scripts they were testing their gateway against and will notify the Participant accordingly.

4.2.10. Review Results and Adjust

If the Participant has not successfully completed the test scripts they should review the results of the test process and make the necessary adjustments to their gateway before re-testing their systems.

4.2.11. Inform Participant & AEMO

Once the Participant has successfully completed all the test scripts the FBSA will provide advice to both the Participant and AEMO Retail Market Procedures Administrator that the Participant has successfully completed the test transactions.

4.2.12. Authorise Participant to use Hub

If AEMO is satisfied with the outcomes of the certification process and the Participant has met their other regulatory and market requirements enabling them to actively participate in the retail market, AEMO will then

1. If relevant - advise other Participants that a New Participant is certified to use the Hub and provide the new Participants ID. New Participants should allow two weeks for other Participant's systems to be updated; and
2. Issue an authorisation for the Participant to actively send transactions through the FBS.

4.2.13. Participant Certified and Authorised to use Hub

At this point the participant is certified to send and receive transactions on the FRC Hub and AEMO has authorised them to use the Hub to conduct business.

NB: Communication of new Participant ID's, and any other information relevant to the operation of the FBS will be via e-mail. These messages will be sent to the communications mailbox nominated when participants register.

Appendix A: CSV Certification

The following validations are carried out on CSV content to provide a level of confidence that the element contents can be saved as a file in a format that can be processed by a relevant CSV processor:

- Headings – All headings are provided in the correct order
- Column designators must be the first line of the content
- No empty lines may be present
- No tab characters are allowed
- No special xml characters (i.e. <, >, &)
- Count of rows matches the RowCount element value
- All mandatory fields are present in rows

NB – The test environment does not have the same processing capabilities as the production environment, so test transactions should not have more than 100 rows of CSV data in any transaction.

Appendix B: Certification Profile

The following table lists the FRC transactions between businesses and the market operator.

Transaction to be recertified	Retailer		Distributor		AEMO	
	To	From	To	From	To	From
AccountCreationNotification	X			X		
AmendMeterRouteDetails/AmendSiteAccessDetails	X	X	X	X		
AmendMeterRouteDetails/AmendSiteAddressDetails	X	X	X	X		
CatsChangeAlert	X	X		X	X	X
CATSChangeRequest		X		X	X	
CatsChangeResponse	X		X			X
CATSChangeWithdrawal		X			X	
CATSDataRequest	X		X			X
CATSNotification	X		X			X
CATSObjectionRequest		X			X	
CATSObjectionResponse	X					X
CATSObjectionWithdrawal		X			X	
CustomerDetailsNotification		X	X			
GasMeterNotification/MeterFix				X	X	
GasMeterNotification/MIRNStatusUpdate				X	X	
MeterDataHistoryRequest			X			X
MeterDataMissingNotification		X	X			X
MeterDataNotification	X			X	X	
MeterDataResponse		X	X			X
MeterDataVerifyRequest		X	X			
MeterDataVerifyResponse	X			X		
MeteredSupplyPointsCountUpdate				X	X	
MeterReadInputNotification		X	X			
NetworkDUOSBillingNotification	X			X		
NetworkDUoSBillingNotification/DisputeNotification		X	X			
NetworkDUoSBillingNotification/DisputeResolution	X			X		
NetworkDUoSBillingNotification/ExcludedServices	X			X		
NetworkDUoSBillingNotification/PaymentAdvice		X	X			
NetworkDUoSBillingNotification/TariffD	X			X		
NetworkDUoSBillingNotification/TariffV	X			X		
NetworkDUoSBillingNotification/TariffH	X			X		
NMIDiscoveryRequest		X	X			
NMIDiscoveryResponse	X			X		
NMIStandingDataRequest		X	X			
NMIStandingDataResponse	X			X		
NMIStandingDataUpdateNotification				X	X	
NMIStandingDataUpdateResponse			X			X
ServiceOrderRequest		X	X			
ServiceOrderResponse	X			X		
SpecialReadRequest		X	X			

Transaction to be recertified	Retailer		Distributor		AEMO	
	To	From	To	From	To	From
SpecialReadResponse	X			X		

Appendix C – Form of Authorisation from AEMO

The results contained in the attached report from the HUB services provider (AEMO) indicate that your tested transactions have passed the appropriate standard. AEMO therefore confirms that your FRC systems are certified to use the FRC Hub in accordance with clause 1.2.5 (a) of the Retail Market Procedures."

Appendix D – Form of AEMO Certification Checklist

Checklist attached (can be accessed:
http://www.aemo.com.au/retailops/0700-0040.doc